SV Series

18W Single Output

ANYSOAR

■ Pictures

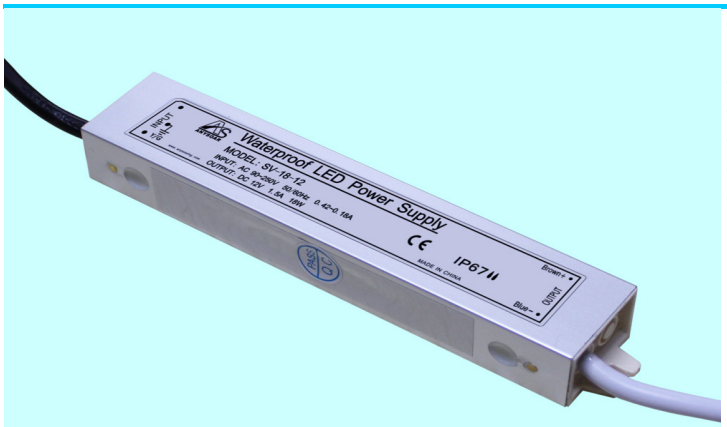

■ Features

- **Protections: Short circuit /Overload /Over voltage / Over temperature**
- **IP67 design for indoor or outdoor installations**
- **Cooling by free air convection**
- **100% full load burn-in test**
- **High reliability**
- **3 years warranty (Note.6)**

■ General Specification (Please refer to www.anysoring.com for detail spec.)

MODEL		SV-18-12	SV-18-24					
OUTPUT	**DC VOLTAGE**	12V	24V					
	RATED CURRENT	1.5A	0.75A					
	CURRENT RANGE	0~1.5A	0~0.75A					
	RATED POWER	18W	18W					
	RIPPLE & NOISE (max.) Note.2	150mVp-p	150mVp-p					
	VOLTAGE TOLERANCE Note.3	±3%						
	LINE REGULATION	±1%						
	LOAD REGULATION	±2%						
	SETUP, RISE TIME	1200ms, 80ms / 230VAC 1200ms, 80ms / 115VAC at full load						
	HOLD UP TIME (Typ.)	60ms / 230VAC 30ms / 115VAC at full load						
INPUT	**VOLTAGE RANGE**	90~264VAC 127~370VDC						
	FREQUENCY RANGE	47~63Hz						
	EFFICIENCY(Typ.)	84%						
	INRUSH CURRENT(max.)	COLD START 40A/230VAC						
	LEAKAGE CURRENT	0.5mA / 240VAC						
PROTECTION	**OVER CURRENT**	95%~130%						
		Protection type : Constant current limiting, recovers automatically after fault condition is removed						
	OVER VOLTAGE	13~16V						
		Protection type : Shut down and latch off o/p voltage, re-power on to recover						
	OVER TEMPERATURE	90℃±10℃						
		Protection type : Shut down o/p voltage, re-power on to recover						
ENVIRONMENT	**WORKING TEMP.**	-30 ~ +70℃ (Refer to output load derating curve)						
	WORKING HUMIDITY	20 ~ 90% RH non-condensing						
	STORAGE TEMP., HUMIDITY	-40 ~ +80℃ , 10 ~ 95% RH						
	TEMP. COEFFICIENT	±0.03%/℃ (0 ~ 50℃)						
	VIBRATION	10 ~ 500Hz, 2G 10min./1cycle, period for 60min. each along X, Y, Z axes						
SAFETY & EMC	**SAFETY STANDARDS**							
	WITHSTAND VOLTAGE	I/P-O/P:3000KVAC						
	ISOLATION RESISTANCE	I/P-O/P:100M Ohms/500VDC						
	EMI CONDUCTION & RADIATION							
	HARMONIC CURRENT							
	EMS IMMUNITY							
OTHERS	**MTBF**	50Khrs min. MIL-HDBK-217F (25℃)						
	DIMENSION (mm)	182*30*20mm(L*W*H)						
	PACKING (kg)	0.22kg						
NOTE	**1. All parameters NOT specially mentioned are measured at 230VAC input, rated load and 25 of ambient temperature.** **2. Ripple & noise are measured at 20MHz of bandwidth by using a 12" twisted pair-wire terminated with a 0.1uf & 47uf parallel capacitor.** **3. Tolerance : includes set up tolerance, line regulation and load regulation.** **4. Derating may be needed under low input voltage. Please check the derating curve for more details.** **5. This is the maximum possible output current and power, over load protection may be activated slightly below this level to comply with the requirement of UL1310 class 2.** **6. 2 years warranty is guaranteed for operating ambient temperature no higher than 68℃.**							

SV Series

18W Single Output

■Mechanical Specification

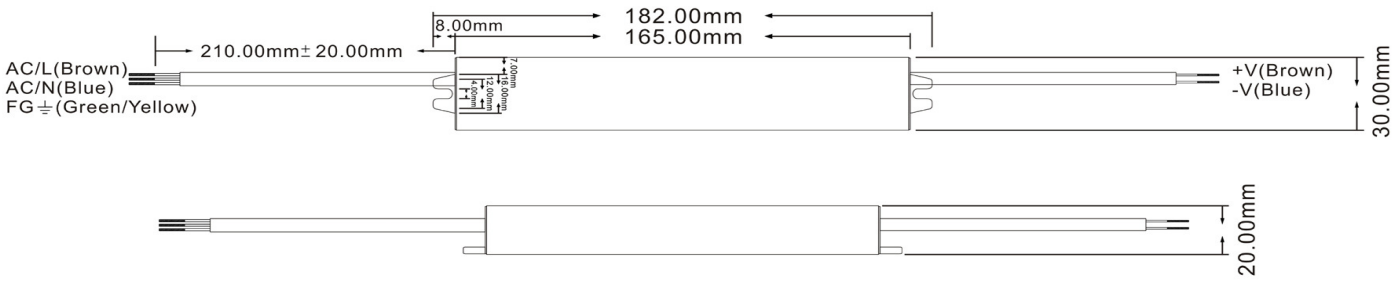

■Block Diagram

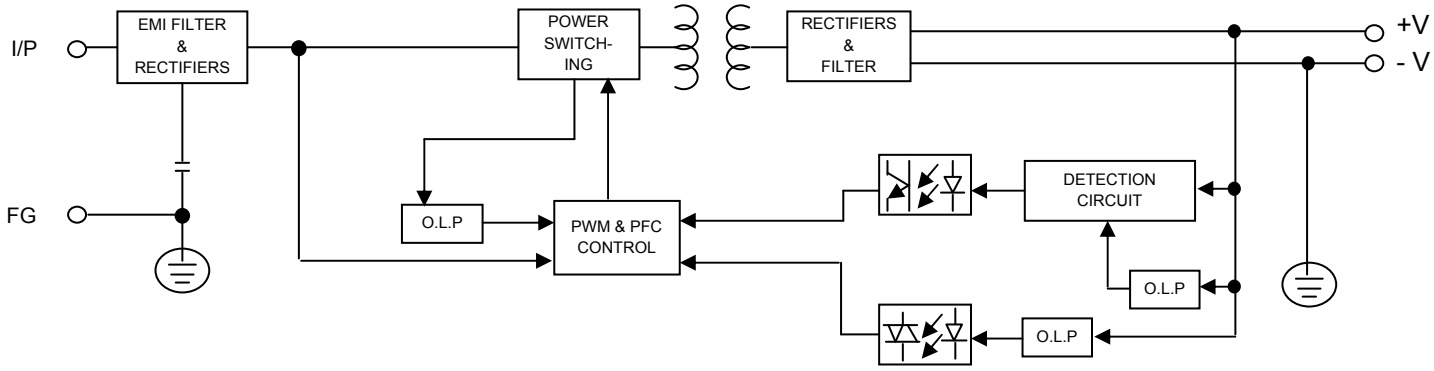

■Derating Curve

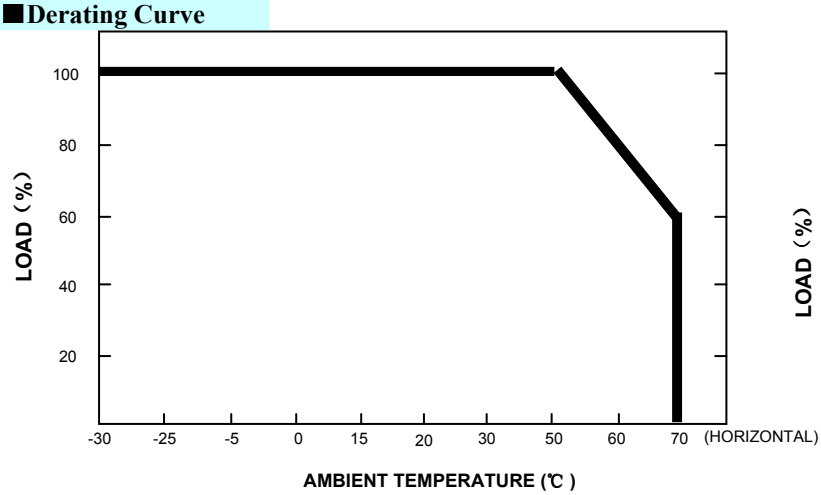
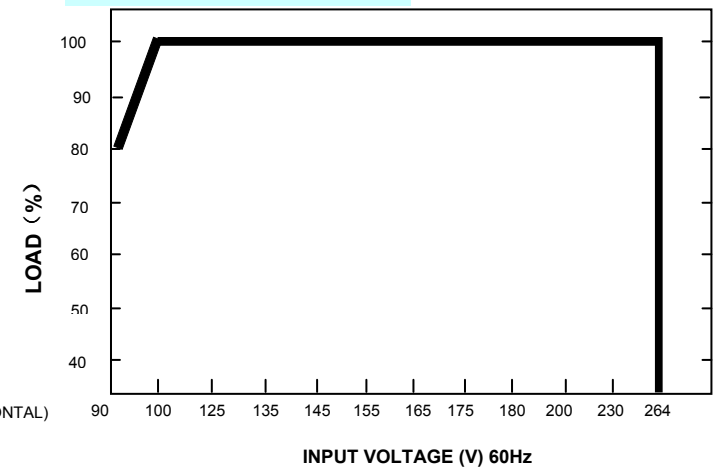
■Static Characteristics